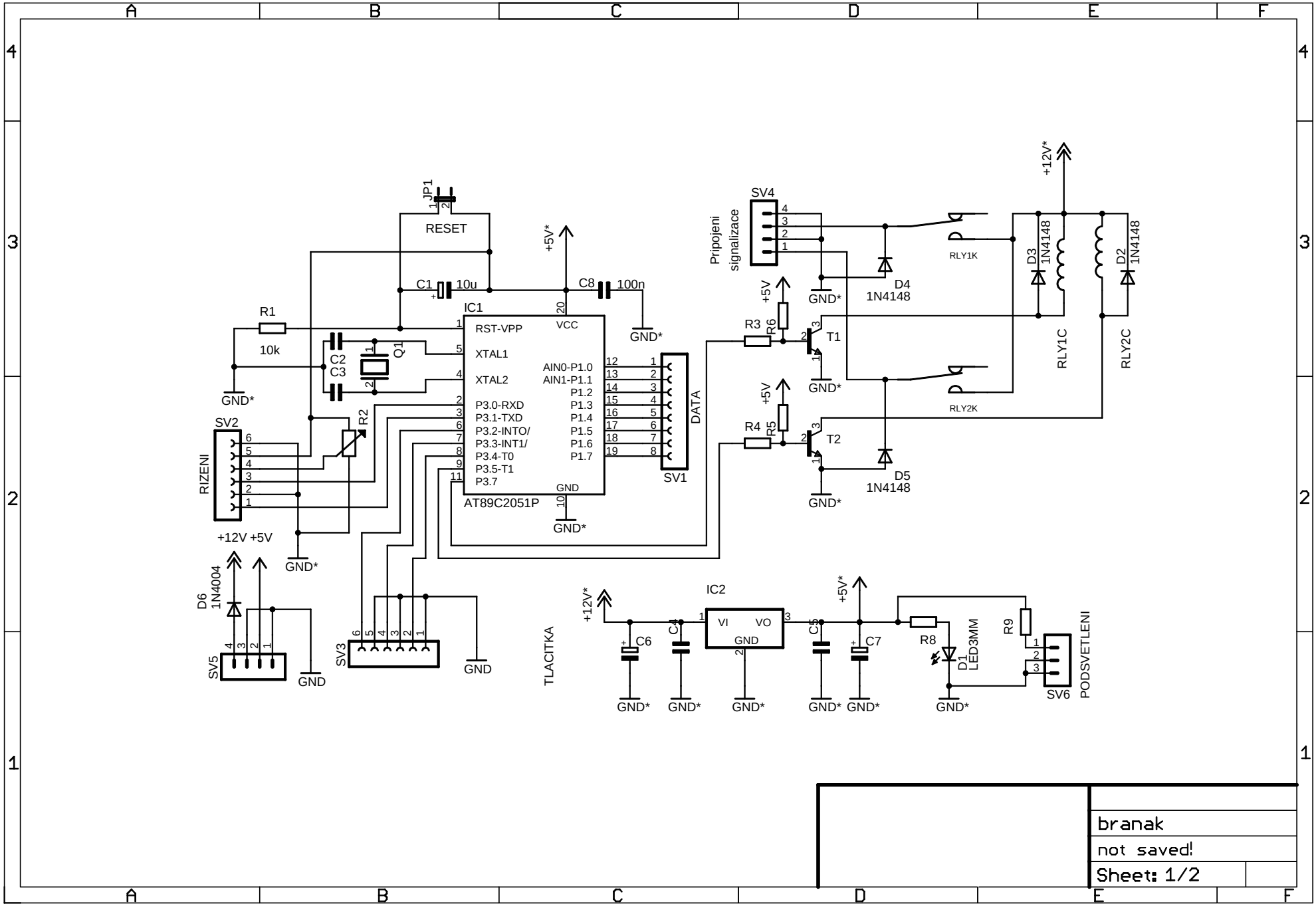
JP1
RESET
+5V*
C1
10u
C8
100n
IC1
RST-VPP
VCC
XTAL1
XTAL2
P3.0-RXD
P3.1-TXD
P3.2-INTO/
P3.3-INT1/
P3.4-T0
P3.5-T1
P3.7
GND
AIN0-P1.0
AIN1-P1.1
P1.2
P1.3
P1.4
P1.5
P1.6
P1.7
AT89C2051P
R1
10k
C2
C3
Q1
R2
SV2
RIZENI
+12V +5V
D6
1N4004
SV5
SV3
GND
GND*
SV1
DATA
SV4
Pripojeni signalizace
D4
1N4148
D5
1N4148
R3
R4
R5
R6
T1
T2
RLY1K
RLY2K
RLY1C
RLY2C
D3
1N4148
D2
1N4148
+12V*
TLACITKA
IC2
VI
VO
C4
C5
C6
C7
R8
R9
D1
LED3MM
SV6
PODSVETLENI
branak
not saved!
Sheet: 1/2